Production Size Specification

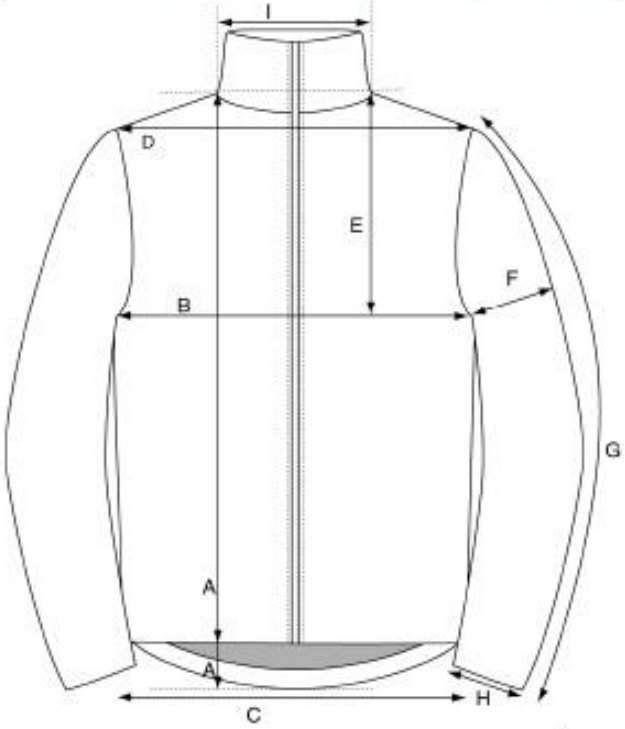

		XS	S	M	L	XL	XXL		Toleranc
A	Bodylength back	67,00	69,00	71,00	73,00	75,00	77,00		
A	Bodylength front	65,00	67,00	69,00	71,00	73,00	75,00		
B	1/2 Chest width	48,00	51,00	54,00	58,00	62,00	66,00		
G	Sleeve length	62,00	63,00	64,00	65,00	66,00	67,00		