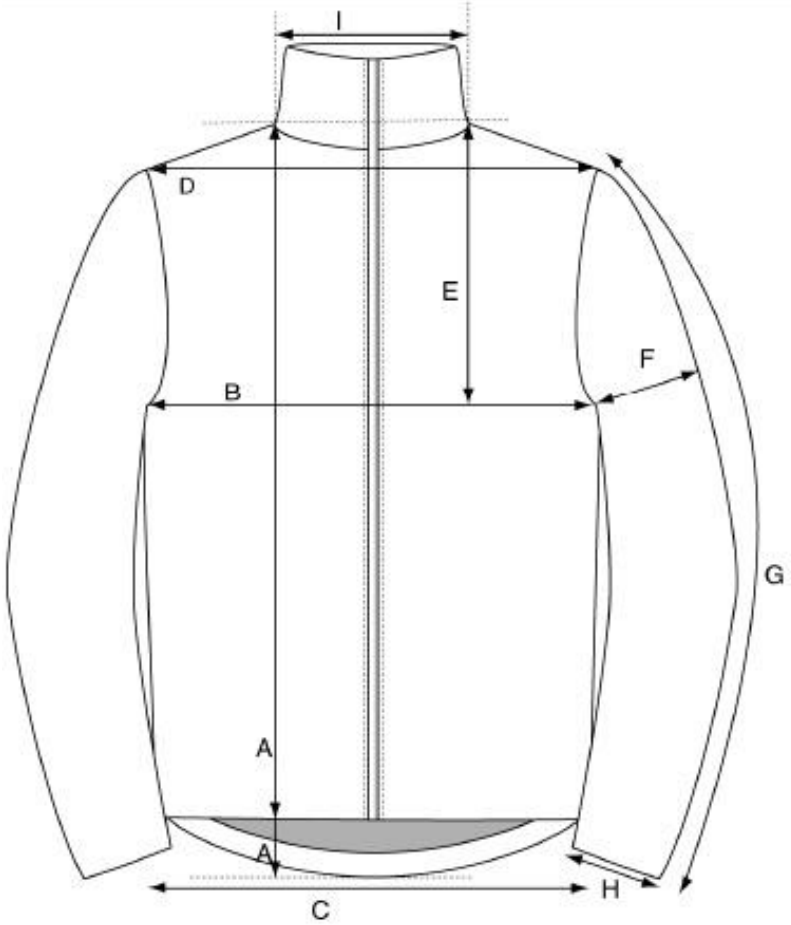

		XS	S	M	L	XL	XXL	XXXL				Tolerance
A	Bodylength front	64,00	68,00	72,00	76,00	78,00	80,00	82,00				
B	1/2 Chest width	48,00	52,00	57,00	62,00	66,00	70,00	74,00				
G	Sleeve length	62,50	64,00	65,50	67,00	68,50	70,00	71,50				